APPENDIX

The following text was filed with a Notice of Emergency Adoption I.D. No. ENV-22-07-00010-E, pertaining to Setting of Body Gripping Traps on Land, published in this issue of the *State Register*.

Title 6 of the Official Compilation of the Codes, Rules and Regulations of the State of New York (NYCRR), Section 6.3, "General regulations for trapping beaver, otter, mink, muskrat, raccoon, opossum, weasel, red fox, gray fox, skunk, coyote, fisher, bobcat and pine marten," is amended as follows:

A new paragraph 6.3 (a)(13) is adopted to read as follows:

(13) Measurement of traps.

(i) Body-gripping traps shall be measured in accordance with paragraph 11-1101(6)(b) of the Environmental Conservation Law. The measurement is the maximum distance between pairs of contacting body gripping surfaces, measured from the inside of the gripping surface. The method of measurement is illustrated in the diagrams shown in this subparagraph. In each case, the arrows indicate the dimension that is to be measured for the depicted type of trap. The addition of one or more bars to the inside of the frame of a body-gripping trap does not alter the dimension to be measured.

(a)

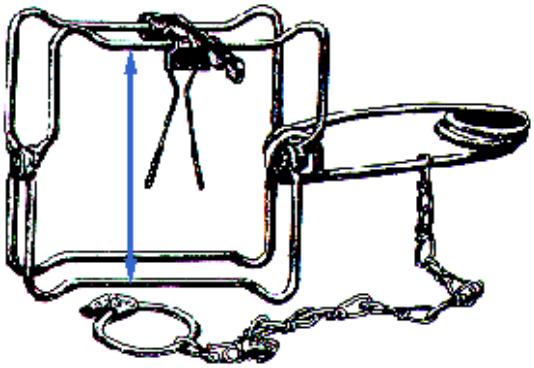

Figure 1. Body-gripping trap showing method of measurement.

(b)

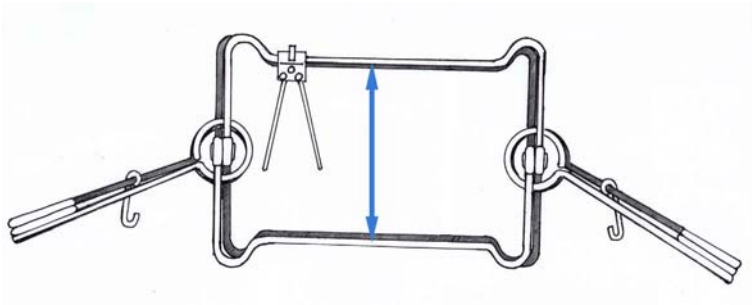

Figure 2. Body-gripping trap showing method of measurement.

(c)

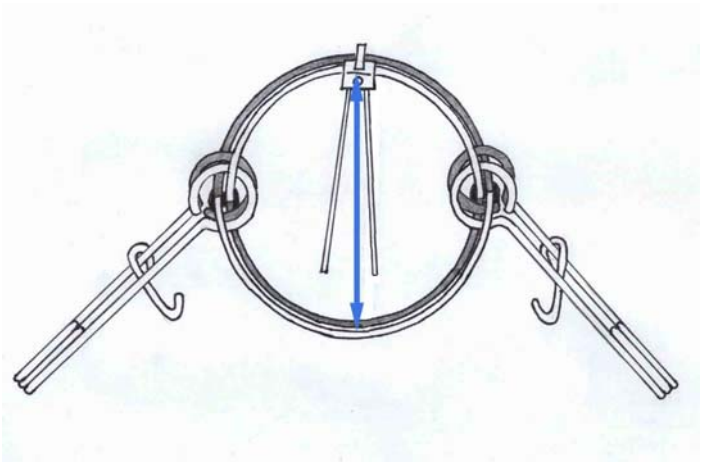

Figure 3. Body-gripping trap showing method of measurement.

(ii) Leg-gripping traps (or "foothold traps") shall be measured in accordance with subdivision 11-1101(6) of the Environmental Conservation Law. The method of measurement is illustrated in the diagrams shown in this subparagraph. In each case, the arrows indicate the dimension that is to be measured for the depicted type of trap.

(a)

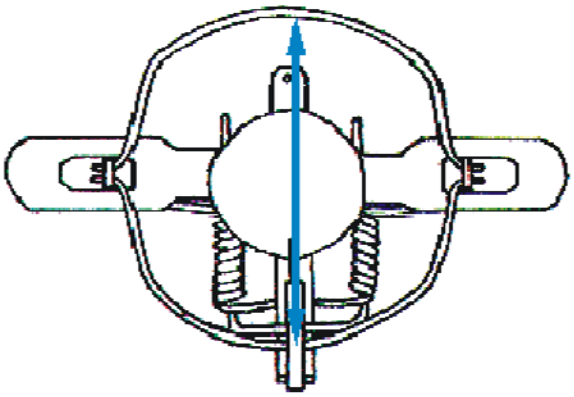

Figure 4. Foothold trap showing method of measurement.

(b)

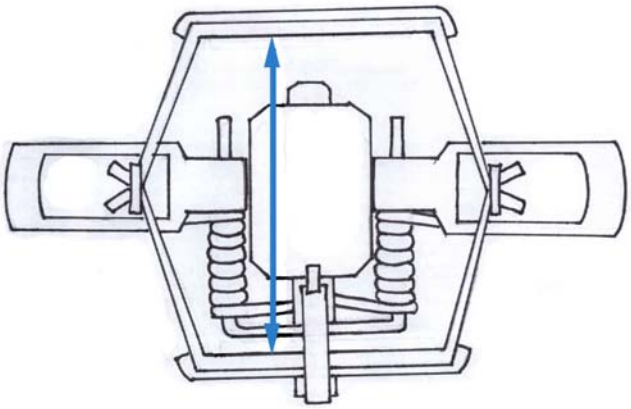

Figure 5. Foothold trap showing method of measurement.

A new paragraph 6.3(a)(14) is adopted to read as follows:

(14) Setting of body-gripping traps on public lands near trails.

(i) For purposes of this section, a "trail" means a designated, marked, and maintained path or way designed for non-motorized recreational use.

(ii) Body-gripping traps shall not be set on lands to which the public has lawful access within one-hundred feet of a trail. This prohibition shall not apply to body-gripping traps set in water on such lands.

A new paragraph 6.3(a)(15) is adopted to read as follows:

(15) Setting of baited body-gripping traps on land.

No person shall set on land a body-gripping trap that measures five and one-half inches or larger if the trap is baited with baits, lures, or other attractants unless the trap is set in compliance with one of the following options:

(i) Set option 1: The trap shall be placed a minimum of four (4) feet above the ground level; or

(ii) Set option 2: The trap complies with all of the following design features and set requirements:

(a) The trap shall be placed within an enclosure constructed of wood, metal, wire, plastic, or natural materials; and

(b) No entrance of the enclosure shall measure more than six (6) inches vertically; and

(c) The enclosure shall be equipped with slots in which the trap springs rest. The slots shall be a minimum of eight (8) inches in length; and

(d) The trap shall be recessed in the slots so that no part of the trap is less than four (4) inches from the opening of the enclosure.

(iii) Set option 3: The trap complies with all of the following design features and set requirements:

(a) The trap shall be placed within an enclosure constructed of natural materials; and

(b) No entrance of the enclosure shall measure more than six (6) inches vertically; and

(c) The trap shall be recessed so that no part of the trap is less than eight (8) inches from the entrance of the enclosure; or

(iv) Set option 4: The trap complies with all of the following design features and set requirements:

(a) The trap shall be placed within an enclosure constructed of wood, metal, wire, plastic, or natural

materials; and

(b) No entrance of the enclosure shall measure more than ten (10) inches vertically or horizontally; and

(c) The trap shall be recessed so that no part of the trap is less than eighteen (18) inches from the entrance of the enclosure; or

(v) Set option 5: The trap complies with all of the following design features and set requirements:

(a) The trap shall be placed within an enclosure constructed of wood, metal, wire, plastic, or natural materials; and

(b) The enclosure shall have no more than one entrance; and

(c) The enclosure shall be securely fastened in a vertical position to a tree or post; and

(d) The enclosure shall be positioned so that the entrance of the enclosure faces the ground and is no more than six (6) inches above the ground; and

(e) The trap shall be recessed so that no part of the trap is less than four (4) inches from the entrance of the enclosure.

A new paragraph 6.3(a)(16) is adopted to read as follows:

(16) Setting of unbaited body-gripping traps on land. The following restrictions shall apply to any body-gripping trap set on land without the use of baits, lures, or other attractants:

(i) No person shall set on land a body-gripping trap that measures more than six (6) inches.

(ii) No person shall set on land a body-gripping trap that measures six inches or less unless it is set so that no part of the body-gripping surface of the trap is eight inches or more above the ground.